ELSEVIER

Chemical Engineering Journal 122 (2006) 65–80

Chemical Engineering Journal

www.elsevier.com/locate/cej

Analysis of integrated kinetic and flow models for anaerobic digesters

Ricardo F.F. Pontes [a], José M. Pinto [a,b,*]

[a] Department of Chemical Engineering, University of São Paulo, SP 05508-900, Brazil

[b] Othmer-Jacobs Department of Chemical and Biological Engineering, Polytechnic University, Brooklyn, NY 11201, USA

Received 22 May 2005; received in revised form 22 February 2006; accepted 22 February 2006

Abstract

The objective of this paper is to develop anaerobic digestion models that integrate features from the kinetics of the process with those from flow (or hydraulic) behavior in modern anaerobic digesters. First, a detailed kinetic model based on the one described in Kalyuzhnyi [S.V. Kalyuzhnyi, Batch anaerobic digestion of glucose and its mathematical modeling. II. Description, verification and application of model, Bioresour. Technol. 59 (1997) 249–258] was modified to account the production of endogenous residue. The two digesters studied in this work are the UASB (upflow anaerobic sludge blanket) and the EGSB (expanded granular sludge bed) reactors. The flow models for those digesters have to take into account the different flow behaviors for the effluent and the sludge. The flow model for the UASB reactor was based on that of Bolle et al. [W.L. Bolle, J. van Breugel, G.C. van Eybergen, N.W.F. Kossen, W. van Gils, Kinetics of anaerobic purification of industrial wastewater, Biotechnol. Bioeng. 28 (1986) 542–548], which was generalized in this work to take into account the volume variations of the reactor sections in non-steady state. The model for the EGSB reactor was developed from the experimental results described in Brito and Melo [A.G. Brito, L.F. Melo, A simplified analysis of reaction and mass transfer in UASB and EGSB reactors, Environ. Technol. 18 (1997) 35–44]. With the kinetic and flow models, integrated models for anaerobic digestion in selected modern anaerobic digesters are developed and validated, and many simulations of these models under different scenarios are described. In particular, the anaerobic digestion in an UASB reactor simulation shows that the volume variations of the sections of this reactor proposed in this work are necessary to accurately describe the behavior of such digester in non-steady state.
© 2006 Elsevier B.V. All rights reserved.

Keywords: Anaerobic digestion; Mathematical modeling; Expanded granular sludge bed; Upflow anaerobic sludge blanket; Flow models

1. Introduction

Nowadays, there is a growing necessity for industrial wastewater treatment. Many of the industrial effluents contain aggressive substances to the environment such as organic material, heavy metals and even pathogenic agents, which cannot be discharged directly into bodies of water. Hence, the need for industries to have in their facilities wastewater treatment plants that at least be able to provide primary (removal of the material in suspension in the wastewater) and secondary treatment (removal of the soluble organic material in the wastewater).

In the 1970s two factors favored the use of anaerobic digesters in wastewater treatment: the sharp rise of petroleum prices and the development of UASB (upflow anaerobic sludge blanket) reactors. In many industrial sites, there is no need for tertiary treatment of the wastewater, which aims the removal of nitrogen and phosphorus from it, and therefore, anaerobic digesters can be used for secondary treatment. In the 1990s, other digesters evolved from the UASB reactor, among them the EGSB (expanded granular sludge bed) reactor.

For a better understanding of the underlying phenomena in anaerobic digestion, a mathematical model is required. Among many important applications, it would predict which compounds are produced or consumed and their corresponding rates. The mathematical model for the anaerobic digestion is composed of several systems. Firstly, there are the mass balances that account for the streams entering and leaving the anaerobic digesters. Moreover, there is the flow (or hydraulic) model for the selected digester (e.g., UASB or EGSB reactor). Finally, there is the kinetic model, which defines the reactions rates, and the stoichiometric model, and both are intrinsically inter-connected.

The stoichiometric model of the anaerobic digestion sets the basis for the kinetic model to be used in the modeling of the anaerobic digester. Stoichiometry defines which substances are present in the process of anaerobic digestion and the ratios among those substances. In a biochemical process, stoichiom-

* Corresponding author. Tel.: +1 718 2603569; fax: +1 718 2603125.
E-mail address: jpinto@poly.edu (J.M. Pinto).

1385-8947/$ – see front matter © 2006 Elsevier B.V. All rights reserved.
doi:10.1016/j.cej.2006.02.018

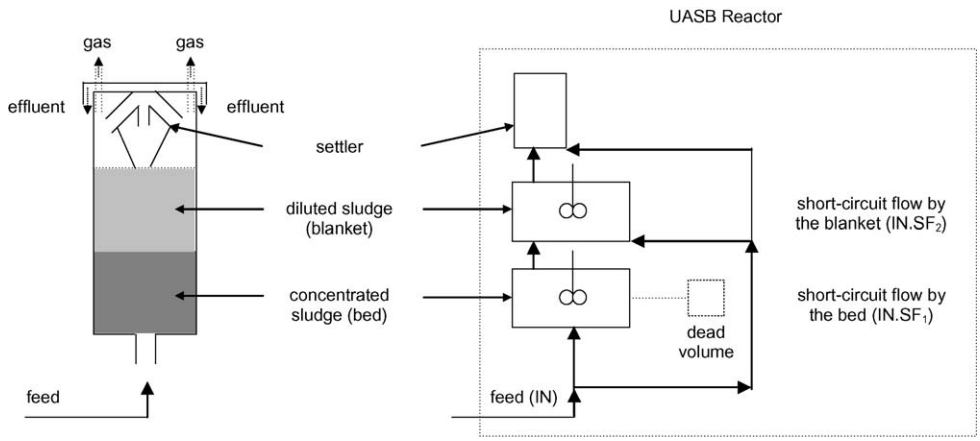

Fig. 1. Schematic representation of the UASB digester.

etry also involves the presence of bacteria that decompose the organic contaminants through metabolic reactions, which are divided into anabolic and catabolic. The anabolic reactions refer to the growth of the bacterial population present in the process through the consumption of the substances (substrates) contained in the effluent stream. Catabolic reactions are the ones in which the consumption of a substrate by the bacteria produce another substrate. Some of the bacteria involved in anaerobic digestion perish and part of that decay creates endogenous residue that may have to be taken into account in the kinetic and flow models.

The kinetic model determines how fast those reactions occur, which are expressed by bacterial growth rates (for the anabolism) and reaction rates for the substrates (for the catabolism). For anaerobic digestion, the first stoichiometric and kinetic models were quite simple, as the one presented by Bolle et al. [1], but in the last 10 years many more detailed mechanisms were developed, such as those from Costello et al. [2], Sam-Soon et al. [3], Kalyuzhnyi [4] and Batstone et al. [5]. Those models involve many types of bacterial populations and substrates.

The type of anaerobic digester used determines the flow model. Anaerobic digesters have three distinct phases that are the effluent, the sludge and the biogas produced (Figs. 1 and 2). The sludge is defined as the agglomeration of all bacterial population present in the reactor, and in many digesters the sludge has a different flow behavior from the effluent. In the sludge, there is also the presence of endogenous residue originated from bacterial decay. The following relation defines the sludge age (θ_c):

$$\theta_c = \frac{\text{sludge mass in the digester}}{\text{sludge discharge rate}}$$

The biogas is mainly composed of methane, carbon dioxide and traces of hydrogen, and is separated from the effluent inside the digester.

The first anaerobic digesters were designed so that the hydraulic retention time (θ_h) was identical to the sludge age. The hydraulic retention time is defined as follows:

$$\theta_h = \frac{\text{digester volume}}{\text{effluent flow rate}}$$

In the most recent anaerobic digesters, the sludge age is larger than the hydraulic retention time.

$$\theta_c \geq \theta_h \tag{1}$$

The advantage of using these most recent digesters is that their volumes are considerably smaller than the ones of a digester whose sludge age is identical to the hydraulic retention time, since the former can hold up a larger sludge mass with a relatively low sludge discharge rate, unlike the latter. The UASB and EGSB reactors are examples of these modern digesters and the focus of this paper.

The UASB reactor is a digester with three internal sections: bed, blanket and settler. The effluent enters the reactor from the bottom where the bed is located and the sludge concentration reaches its maximum value. In the blanket, the sludge concentration is smaller than the one found in the bed. The settler section is where the three phases are separated, and the retained sludge settles back to the blanket.

The EGSB reactor can be considered an evolution of the UASB reactor, since it solves some of the problems found in the UASB. Inside the EGSB reactor, the higher upflow velocities, which are caused by a high recycle rate and a high

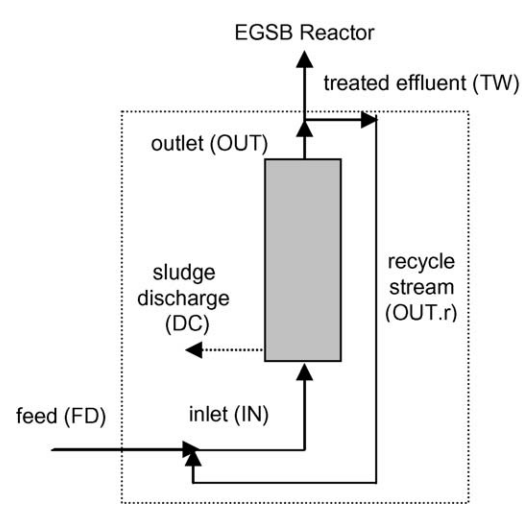

Fig. 2. Schematic representation of the EGSB digester.

height/diameter ratio, cause the sludge to expand through the whole reactor thus improving its contact with the effluent. Moreover, the high height/diameter ratio eliminates most of the dead volume inside the reactor.

Despite the recent advances in modeling the operation and design of anaerobic digesters, most works concentrate on specific aspects of the problem, such as kinetics or hydraulics. Therefore, this paper's objective is to develop a comprehensive mathematical model for anaerobic digesters that accounts for the set of biochemical reactions known as anaerobic digestion as well as the flow distribution in these selected reactors.

In Section 2, the kinetic models are presented and described in detail. A description of the flow models, which encompasses the kinetic model, selected for the anaerobic digesters (UASB and EGSB reactors) is made in Section 3. The validation of all models is presented in Section 4, and the conclusions are presented in Section 5.

2. Kinetic models

The kinetic models used in the current work rely on the ones developed by Bolle et al. [1] and Kalyuzhnyi [4]. The first one is mainly used to validate the flow model for the UASB reactor presented by Bolle et al. [6]. The detailed kinetic model that is used on the simulation of the anaerobic digesters in the present paper is based on that of Kalyuzhnyi [4].

The present kinetic models contain the following subscripts:

i (bacteria types)

AB	butyric acid user acetogens
AE	ethanol user acetogens
F	fermentors
I	endogenous residue
MA	acetoclastic methanogens
MH	hydrogetrophic methanogens

j (substrates and inhibitors)

AA	acetic acid
B	butyric acid
CH_4	methane
CO_2	carbon dioxide
E	ethanol
G	glucose
H	hydrogen

and the following variables and parameters:

μ_i	growth rate for bacterium i (h^{-1})
μ_{mi}	maximum growth rate for bacterium i (h^{-1})
b_i	decay rate for bacterium i (h^{-1})
K_j	half-speed constant for substrate j (mol/m^3)
$K_{Ii,k}$	inhibition constant for bacterium i by inhibitor k (mol/m^3)
MM_j	molar mass of substrate j (kg/mol)
R_{Sj}	reaction rate for substrate j (kg/m^3 h)
S'_j	concentration of substrate j (mol/m^3)
S_j	concentration of substrate j (kg/m^3)
TM	rate of formation of the endogenous residue (kg/m^3 h)
X_i	concentration of bacterium i (kg/m^3)
Y_i	bacterial yield (kg/mol)

Table 1
Stoichiometric models for anaerobic digestion

Reference	Bacterial population	Stoichiometry
[1]	MA	$CH_3COOH \rightarrow CH_4 + CO_2$
[4]	F	$C_6H_{12}O_6 + 0.02H_2O \rightarrow 0.34C_2H_5OH + 0.39C_3H_7COOH + 1.31CH_3COOH + 1.14CO_2 + 0.82H_2$
		$C_6H_{12}O_6 + 1.2NH_3 \rightarrow 1.2C_5H_9O_3N + 2.4H_2O$
	AE	$C_2H_5OH + H_2O \rightarrow CH_3COOH + 2H_2$
		$C_2H_5OH + 0.2H_2O + 0.4NH_3 \rightarrow 0.4C_5H_9O_3N + 2H_2$
	AB	$C_3H_7COOH + 2H_2O \rightarrow 2CH_3COOH + 2H_2$
		$C_3H_7COOH + 0.4H_2O + 0.8NH_3 \rightarrow 0.4C_5H_9O_3N + 2H_2$
	MA	$CH_3COOH \rightarrow CH_4 + CO_2$
		$CH_3COOH + 0.4NH_3 \rightarrow 0.4C_5H_9O_3N + 0.8H_2O$
	MH	$H_2 + 0.25CO_2 \rightarrow 0.25CH_4 + 0.5H_2O$
		$H_2 + 0.5CO_2 + 0.1NH_3 \rightarrow 0.1C_5H_9O_3N + 0.5H_2O$

The stoichiometric models that correspond to the kinetic models are described in Table 1. As seen there, the stoichiometric and kinetic models described by Kalyuzhnyi [4] involve seven substrates and five different bacterial populations.

In the current work, the formation of endogenous residue is added to both kinetic models and the pH inhibition is suppressed from the model based on Kalyuzhnyi [4] since in most of anaerobic digesters pH is controlled and effluents contain pH-buffering substances.

The equations that describe the kinetic model based on Kalyuzhnyi [4] are as follows:

$$\mu_F = \mu_{mF} \frac{S'_G}{K_G + S'_G} \frac{1}{1 + S'_H/K_{IF,H}} \tag{2}$$

$$\mu_{AE} = \mu_{mAE} \frac{S'_E}{K_E + S'_E} \frac{1}{1 + S'_H/K_{IAE,H}} \tag{3}$$

$$\mu_{AB} = \mu_{mAB} \frac{S'_B}{K_B(1 + S'_{AA}/K_{IAB,AA}) + S'_B} \frac{1}{1 + S'_H/K_{IAB,H}} \tag{4}$$

$$\mu_{MA} = \mu_{mMA} \frac{S'_{AA}}{K_{AA} + S'_{AA}} \frac{1}{1 + S'_E/K_{IMA,E}} \frac{1}{1 + S'_B/K_{IMA,B}} \tag{5}$$

$$\mu_{MH} = \mu_{mMH} \frac{S'_H S'_{CO_2}}{(K_H + S'_H)(K'_{CO_2} + S'_{CO_2})} \frac{1}{1 + S'_E/K_{IMH,E}} \times \frac{1}{1 + S'_B/K_{IMH,B}} \tag{6}$$

$$TM = Y_{X/I} \sum_{i, i \neq I} b_i X_i \tag{7}$$

$$R_{SG} = -\frac{\mu_F X_F}{Y_F} MM_G \quad (8)$$

$$R_{SE} = \left[0.34\left(1-\frac{Y_F}{MM_G}\right)\frac{\mu_F X_F}{Y_F} - \frac{\mu_{AE} X_{AE}}{Y_{AE}}\right] MM_E \quad (9)$$

$$R_{SB} = \left[0.39\left(1-\frac{Y_F}{MM_G}\right)\frac{\mu_F X_F}{Y_F} - \frac{\mu_{AB} X_{AB}}{Y_{AB}}\right] MM_B \quad (10)$$

$$R_{SAA} = \left[1.31\left(1-\frac{Y_F}{MM_G}\right)\frac{\mu_F X_F}{Y_F} + \left(1-\frac{Y_{AE}}{MM_E}\right)\frac{\mu_{AE} X_{AE}}{Y_{AE}} + 2\left(1-\frac{Y_{AB}}{MM_B}\right)\frac{\mu_{AB} X_{AB}}{Y_{AB}} - \frac{\mu_{MA} X_{MA}}{Y_{MA}}\right] MM_{AA} \quad (11)$$

$$R_{SH} = \left[0.82\left(1-\frac{Y_F}{MM_G}\right)\frac{\mu_F X_F}{Y_F} + 2\left(1-\frac{Y_{AE}}{MM_E}\right)\frac{\mu_{AE} X_{AE}}{Y_{AE}} + 2\left(1-\frac{Y_{AB}}{MM_B}\right)\frac{\mu_{AB} X_{AB}}{Y_{AB}} - \frac{\mu_{MH} X_{MH}}{Y_{MH}}\right] MM_H \quad (12)$$

$$R_{SCO_2} = \left[1.14\left(1-\frac{Y_F}{MM_G}\right)\frac{\mu_F X_F}{Y_F} + \left(1-\frac{Y_{MA}}{MM_{AA}}\right)\frac{\mu_{MA} X_{MA}}{Y_{MA}} - 0.25\left(1-\frac{Y_{MH}}{MM_H}\right)\frac{\mu_{MH} X_{MH}}{Y_{MH}} - 0.5\frac{\mu_{MH} X_{MH}}{MM_H}\right] MM_{CO_2} \quad (13)$$

$$R_{SCH_4} = \left[\left(1-\frac{Y_{MA}}{MM_{AA}}\right)\frac{\mu_{MA} X_{MA}}{Y_{MA}} + 0.25\left(1-\frac{Y_{MH}}{MM_H}\right)\frac{\mu_{MH} X_{MH}}{Y_{MH}}\right] MM_{CH_4} \quad (14)$$

Eqs. (2)–(6) refer to the anabolic reactions where the growth rate, μ_i, for bacteria i is determined. Eq. (7) represents the rate of formation of the endogenous residue, TM, according to Van Haandel and Marais [7]. These authors suggest a value of 0.2 for parameter $Y_{X/I}$. Eqs. (8)–(14) are the reaction rates, R_{Sj}, for the substrates, where j represents one of these involved in the anaerobic digestion. The kinetic parameters μ_{mi}, b_i, Y_i, K_j and $K_{Ij,k}$ are described in Kalyuzhnyi [4] and the values used for those parameters are found in the same source. The set of the 13 kinetic equations contains 24 variables.

The present model contains two corrections from the model originally described by Kalyuzhnyi [4]. First, Eq. (A3) of Kalyuzhnyi [4] (growth rate of the AB bacterium) was written incorrectly. Following the reasoning of Eqs. (11) and (13) of Kalyuzhnyi [4], the correct form would require the multiplication (instead of addition) of the inhibition by acetic acid term by the half-speed constant (K_B). Second, Eq. (A16) has an incorrect stoichiometric coefficient. According to Eq. (1) of Kalyuzhnyi [4], that coefficient should be 1.14 instead of 0.82. These are correctly presented in this work in Eqs. (4) and (13), respectively.

The stoichiometric and kinetic models described by Bolle et al. [1] involve three substrates and one type of bacterial population. All of the substrates and the bacterium involved in the model described by Bolle et al. [1] are contained in the model described by Kalyuzhnyi [4]. For this model, pH inhibition is present and the model considers that only the non-ionized acetic acid is suitable for metabolic reactions.

In addition to some of the variables that were previously described, the kinetic model based on Bolle et al. [1] contains the following variables:

K_j half-speed constant for substrate j (kg/m^3)
S'_j concentration of non-ionized substrate j (kg/m^3)

The equations that describe the kinetic model based on Bolle et al. [1] are as follows:

$$\mu_{MA} = \mu_{mMA}\frac{1}{1 + K_{AA}/S'_{AA} + S'_{AA}/K_{IAMA}} \quad (15)$$

$$TM = Y_{X/I}\sum_{i,i\neq I} b_i X_i \quad (16)$$

$$R_{SAA} = -\frac{\mu_{MA} X_{MA}}{Y_{MA}} \quad (17)$$

$$R_{SCO_2} = 0.733(1 - Y_{MA})\frac{\mu_{MA} X_{MA}}{Y_{MA}} \quad (18)$$

$$R_{SCH_4} = 0.266(1 - Y_{MA})\frac{\mu_{MA} X_{MA}}{Y_{MA}} \quad (19)$$

Eq. (15) represents the growth rate of the only bacterial population involved that represents the acetoclastic methanogens (MA), whereas Eqs. (17)–(19) refer to the reaction rates of the three substrates involved in the process.

The current work added the term $(1-Y_{MA})$ to Eqs. (18) and (19), which is not present in the model described by Bolle et al. [1]. That term is necessary to the model, since it takes into account the substrate consumed for the anabolic reactions.

3. Flow models

As described in Section 1, anaerobic digestion involves three distinct phases: the wastewater, the sludge and the biogas. These phases have distinct behavior inside an anaerobic digester. The flow model of a non-conventional anaerobic digester has to take the three phases into account, especially the sludge phase, since the sludge age is higher than the hydraulic retention time.

Actually, the majority of the existing flow models are unable to describe with reasonable precision the flow behavior of the sludge inside an anaerobic digester. Most of them simply categorize the UASB and EGSB reactors as CSTRs or PFRs according to the flow behavior of the effluent. Bolle et al. [6] and Narnoli and Mehrotra [8] are some of the few authors that explicitly

modeled the flow behavior of the sludge in a UASB reactor. Brito and Melo [9] have modeled the EGSB reactor as a CSTR due to its high recycle rate.

3.1. UASB reactor

This work relies on the flow model proposed by Bolle et al. [6] that develop compartmental models for each of the sections of the digester. The work of Narnoli and Mehrotra [8] relies on a distributed-parameter, three-dimensional model and it is extremely complex and difficult to apply to the effluent treatment on anaerobic digesters.

The flow model for the UASB reactor contains the following variables defined by index m, which refers to a section of the UASB reactor (1: bed; 2: blanket; 3: settler):

$\phi_{CH_4,m}$	volumetric production rate of biogas in section m of the UASB reactor (m^3/h)
$\mu i_{,m}$	growth rate for bacterium i in section m of the UASB reactor (h^{-1})
$MS_{j,m}$	total mass of substrate j in section m of the UASB reactor (kg)
$MX_{i,m}$	total mass of bacterium i in section m of the UASB reactor (kg)
$R_{Sj,m}$	reaction rate of substrate j for section m of the UASB reactor (kg/m^3 h)
$S_{j,IN}$	concentration of substrate j in the inlet stream (kg/m^3)
$S_{j,m}$	concentration of substrate j in section m of the UASB reactor (kg/m^3)
TM_m	rate of formation of the endogenous residue in section m of the UASB reactor (kg/m^3 h)
V_m	volume of section m of the UASB reactor (m^3)
h_m	height of section m of the UASB reactor (m)
$X_{i,IN}$	concentration of bacterium i in the inlet stream (kg/m^3)
$X_{i,m}$	concentration of bacterium i in section m of the UASB reactor (kg/m^3)

besides the following parameters:

η	settler efficiency
η_{dr}	dragging efficiency of the biogas bubbles
A	cross-sectional area of the UASB reactor (m^2)
h	overall height of the UASB reactor (m)
F_{IN}	inlet stream flow rate (m^3/h)
V	overall volume of the UASB reactor (m^3)
v_s	settling velocity of the sludge (m/h)
v_{sg}	superficial velocity of the biogas bubbles (m/h)
x'	dragging coefficient of the biogas bubbles

The dragging coefficient can be calculated by

$$x' = \frac{\rho_L - \rho_{CH_4}}{\rho_S - \rho_L} \tag{20}$$

where ρ_{CH_4} is the methane density (kg/m^3), ρ_L the effluent density (kg/m^3), and ρ_S is the sludge density (kg/m^3).

The proposed flow model for the UASB reactor is based on the model described by Bolle et al. [10] that defined the short-circuit streams present inside the UASB reactor as well as in the dynamic model described in Bolle et al. [6]. As shown in Fig. 1, the affluent stream, F_{IN}, is fed into the UASB reactor through the bottom, and there are two short-circuit streams inside the UASB reactor that depend on the following parameters:

SF_1 is the short-circuit fraction that by-passes the bed and SF_2 the short-circuit fraction that by-passes the bed and the blanket.

These parameters can be either specified or calculated from correlations that depend on other design parameters, such as the ones described by Bolle et al. [10]:

$$SF_1 = f(h_1, v_{sg}) = (-0.25h_1 + 0.95)(0.42v_{sg} + 0.44) \tag{21}$$

$$\begin{aligned} SF_2 &= f(h_1, h_2, v_{sg}) \\ &= (0.16h_2^2 - 1.24h_1 + 2.5)(-0.16v_{sg}^2 + 1.6v_{sg})SF_1 \end{aligned} \tag{22}$$

Hence, the following streams are defined:

F_{IN} (SF_1)	short-circuit stream that by-passes the bed
F_{IN} (SF_2)	short-circuit stream that by-passes the bed and the blanket
F_{IN} (SF_1–SF_2)	short-circuit stream that by-passes bed but returns to the blanket

The model described by Bolle et al. [6] is one of the few that approach the flow patterns of the effluent and the sludge in different manners. Bolle et al. [6] state that the sludge is carried from the bed to the blanket by the biogas bubbles and that the sludge returns from the blanket to the bed by action of gravity. The mass balance for a bacterium i in the bed ($m = 1$) is given by

$$\begin{aligned} \frac{dMX_{i,1}}{dt} &= F_{IN}X_{i,IN} - \eta_{dr}x'\phi_{CH_{4,1}}X_{i,1} + AX_{i,2}v_s \\ &\quad + \mu_{i1}X_{i,1}V_1 - b_iX_{i,1}V_1 \end{aligned} \tag{23}$$

where the terms are as follows:

$F_{IN}X_{i,IN}$	amount of bacterium i that is carried into the bed from the feed stream
$\eta_{dr}x'\phi_{CH_{4,1}}X_{i,1}$	amount of bacterium i carried from the bed to the blanket by the biogas
$AX_{i,2}v_s$	amount of bacterium I that settles back from the blanket to the bed
$\mu_{i,1}X_{i,1}V_1$	amount of bacterium i that is generated by anabolism in the bed
$b_iX_{i,1}V_1$	amount of bacterium i that perishes in the bed.

In the blanket, the sludge is carried by the effluent stream to the settler, where a larger part of the sludge is retained and settled back in the blanket. The mass balance for a bacterium i in the blanket ($m = 2$) is:

$$\begin{aligned} \frac{dMX_{i,2}}{dt} &= \eta_{dr}x'\phi_{CH_{4,1}}X_{i,1} - AX_{i,2}v_s - F_{IN}(1-\eta) \\ &\quad \times (1 - SF_2)X_{i,2} + \mu_{i,2}X_{i,2}V_2 - b_iX_{i,2}V_2 \end{aligned} \tag{24}$$

where the terms are as follows:

$F_{IN}(1-\eta)(1-SF_2)X_{i,2}$ amount of bacterium i that is not retained by the settler
$\mu_{i,2}X_{i,2}V_2$ amount of bacterium i that is generated by anabolism in the bed
$b_iX_{i,2}V_2$ amount of bacterium i that perishes in the bed.

The mass balances for the sludge depend on some flow parameters defined by Bolle et al. [6], which are η, η_{dr}, x' and v_s. Bolle et al. [6], however, do not describe with accuracy how to calculate η_{dr} and v_s. The value of η is set arbitrarily according to Bolle et al. [6] and will be discussed later in this paper.

For the endogenous residue, represented by the index I, the current work assumed that it has the same flow behavior that of the bacterial populations. Hence, the equations for the endogenous residue in the bed ($m=1$) and blanket ($m=2$) are respectively:

$$\frac{dMX_{I,1}}{dt} = F_{IN}X_{I,IN} - \eta_{dr}x'\phi_{CH_{4,1}}X_{I,1} + AX_{I,2}v_s + TM_1V_1 \tag{25}$$

$$\frac{dMX_{I,2}}{dt} = \eta_{dr}x'\phi_{CH_{4,1}}X_{I,1} - AX_{I,2}v_s - F_{IN}(1-\eta) \times (1-SF_2)X_{I,2} + TM_2V_2 \tag{26}$$

where TM_m V_m is the amount of endogenous residue generated in section m of the UASB reactor.

Bolle et al. [6] and Narnoli and Mehrotra [8] state that the concentration of the sludge in the bed is constant and maximum ($dX_1=0$). For the current work, that value was set to 90 kg/m^3 that corresponds to the one used in Bolle et al. [6] and within 6% to the ones presented by Narnoli and Mehrotra [8]. That means that the volume of the bed is determined by the region in the UASB where the total sludge concentration (including the endogenous residue) is equal to that value. The equation that describes how the volume of the bed varies in transient state is:

$$\frac{dMX_1}{dt} = X_1\frac{dV_1}{dt} + V_1\frac{dX_1}{dt} = X_1\frac{dV_1}{dt} = \sum_i \frac{dMX_{i,1}}{dt} \tag{27}$$

Hence

$$\frac{dV_1}{dt} = \frac{1}{X_1}\sum_i \frac{dMX_{i,1}}{dt} \tag{28}$$

The total volume of the UASB reactor can be expressed simply by the following relation:

$$V = V_1 + V_2 + V_3 \tag{29}$$

The settler volume, V_3, is considered constant, so

$$dV_3 = 0 \tag{30}$$

Thus, differentiating Eq. (29), results in

$$dV_1 = -dV_2 \tag{31}$$

Eq. (31) states that in transient state, the volume gained by the bed is identical to the one lost by the blanket and vice versa. Hence

$$-\frac{dV_2}{dt} = \frac{1}{X_1}\sum_i \frac{dMX_{i,1}}{dt} \tag{32}$$

For the substrate mass balances, both the bed and the blanket are considered as CSTRs. Nevertheless, it is important to notice that both the bed and blanket have variable volumes in transient state, which is an important factor not taken into account by the model of Bolle et al. [6]. Those volumes vary according to Eqs. (27) and (30), thus depend on the sludge mass balances. We incorporate those volume changes in transient state.

The current work proposes an additional term regarding the amount of substrate j gained/lost due to the variation of the bed/blanket volumes in transient state. This term is as follows:

$$\left[(1-\lambda)S_{j,1} + \lambda S_{j,2}\right]\frac{dV_1}{dt} \tag{33}$$

where λ is an auxiliary binary variable whose value is: 1 if $dV_1>0$; 0 if $dV_1<0$.

When the bed expands ($dV_1>0$), and therefore the blanket contracts, the first term of (33) incorporates part of the blanket, which includes an amount of substrate j that has to be taken into account into the mass balance of that substrate. That amount is represented by

$$S_{j,2}\frac{dV_1}{dt} \tag{34}$$

Nevertheless, the bed loses an amount of substrate j to the blanket, when the bed contracts ($dV_1<0$). That amount is represented by

$$S_{j,1}\frac{dV_1}{dt} \tag{35}$$

Hence, the proposed mass balance for substrate j in the bed is given by

$$\frac{dMS_{j,1}}{dt} = (1-SF_1)F_{IN}S_{j,IN} - (1-SF_1)F_{IN}S_{j,1} + R_{Sj,1}V_1 + ((1-\lambda)S_{j,1} + \lambda S_{j,2})\frac{dV_1}{dt} \tag{36}$$

where $(1-SF_1)$ F_{IN} $S_{j,IN}$ is the amount of substrate j that enters the bed through the feed stream, $(1-SF_1)$ F_{IN} $S_{j,1}$ the amount of substrate j that leaves the bed to the blanket, and $R_{Sj,1}$ V_1 is the amount of substrate j that is consumed/generated in the metabolic reactions.

Likewise, the substrate mass balance for the blanket has to take into account those terms. So that balance is the following, which takes into consideration the term proposed in the current work:

$$\frac{dMS_{j,2}}{dt} = (1-SF_1)F_{IN}S_{j,1} + (SF_1-SF_2)F_{IN}S_{j,IN} - (1-SF_2)F_{IN}S_{j,2} + R_{Sj,1}V_1 - ((1-\lambda)S_{j,1} + \lambda S_{j,2})\frac{dV_1}{dt} \tag{37}$$

where $(1-SF_1)F_{IN}S_{j,1}$ is the amount of substrate j that enters the blanket from the bed; $(SF_1-SF_2)F_{IN}S_{j,IN}$ the amount of substrate

j that enters the blanket from the fraction of the feed stream that short-circuited the bed, $(1-\mathrm{SF}_1)\,F_{\mathrm{IN}}S_{j,2}$ the amount of substrate j that leaves the blanket to the settler, and $R_{Sj,2}V_2$ is the amount of substrate j that is consumed/produce in the metabolic reactions.

It is assumed that no reaction occurs in the settler, so the mass balances for bacterium i (including endogenous residue) and substrate j in the settler are respectively:

$$\frac{\mathrm{dMX}_{i,3}}{\mathrm{d}t} = (1-\eta)(1-\mathrm{SF}_2)F_{\mathrm{IN}}X_{i,2} - F_{\mathrm{IN}}X_{i,3} \tag{38}$$

$$\frac{\mathrm{dMS}_{j,3}}{\mathrm{d}t} = (1-\mathrm{SF}_2)F_{\mathrm{IN}}S_{j,2} + \mathrm{SF}_2F_{\mathrm{IN}}S_{j,\mathrm{IN}} - F_{\mathrm{IN}}S_{j,3} \tag{39}$$

According to Bolle et al. [6], the settler efficiency, η, is an adjustable parameter whose values generally range from 0.95 to 1. The suggested value for preventing sludge washout is $\eta = 0.995$.

Therefore, the equations that constitute the flow model for the UASB reactor can be summarized into the following:

Short-circuit streams:

$$\mathrm{SF}_1 = (-0.25h_1 + 0.95)(0.42v_{\mathrm{sg}} + 0.44) \tag{21$'$}$$

$$\mathrm{SF}_2 = (0.16h_2^2 - 1.24h_1 + 2.5)(-0.16v_{\mathrm{sg}}^2 + 1.6v_{\mathrm{sg}})\mathrm{SF}_1 \tag{22$'$}$$

Bed mass and volumetric balances:

$$\frac{\mathrm{dMX}_{i,1}}{\mathrm{d}t} = F_{\mathrm{IN}}X_i - \eta_{\mathrm{dr}}x'\phi_{\mathrm{CH}_{4,1}}X_{i,1} + AX_{i,2}v_{\mathrm{s}} + \mu_{i,1}X_{i,1}V_1 - b_iX_{i,1}V_1,$$
$$i = \mathrm{F, AE, AB, MA\ and\ MH} \tag{23$'$}$$

$$\frac{\mathrm{dMX}_{I,1}}{\mathrm{d}t} = F_{\mathrm{IN}}X_{I,\mathrm{IN}} - \eta_{\mathrm{dr}}x'\phi_{\mathrm{CH}_{4,1}}X_{I,1} + AX_{I,2}v_{\mathrm{s}} + \mathrm{TM}_1V_1$$

$$\frac{\mathrm{d}V_1}{\mathrm{d}t} = \frac{1}{X_1}\sum_i \frac{\mathrm{dMX}_{i,1}}{\mathrm{d}t}$$

$$\frac{\mathrm{dMS}_{j,1}}{\mathrm{d}t} = (1-\mathrm{SF}_1)F_{\mathrm{IN}}(S_{j,\mathrm{IN}} - S_{j,1}) + R_{Sj,1}V_1 + ((1-\lambda)S_{j,1} + \lambda\cdot S_{j,2})\frac{\mathrm{d}V_1}{\mathrm{d}t},$$
$$j = \mathrm{G, E, B, AA, H\ and\ CO_2} \tag{36$'$}$$

$$\phi_{\mathrm{CH}_{4,1}} = \frac{R_{\mathrm{SCH}_{4,1}}V_1}{\rho_{\mathrm{CH}_4}} \tag{40}$$

$$\lambda = \begin{cases} 1 & \text{if } \mathrm{d}V_1 > 0 \\ 0 & \text{if } \mathrm{d}V_1 < 0 \end{cases} \tag{41}$$

Blanket mass and volumetric balances:

$$\frac{\mathrm{dMX}_{i,2}}{\mathrm{d}t} = \eta_{\mathrm{dr}}x'\phi_{\mathrm{CH}_{4,1}}X_{i,1} - AX_{i,2}v_{\mathrm{s}} - (1-\eta) \times (1-\mathrm{SF}_2)F_{\mathrm{IN}}X_{i,2} + \mu_{i,2}X_{i,2}V_2 - b_iX_{i,2}V_2,$$
$$i = \mathrm{F, AE, AB, MA\ and\ MH} \tag{24$'$}$$

$$\frac{\mathrm{dMX}_{I,2}}{\mathrm{d}t} = \eta_{\mathrm{dr}}x'\phi_{\mathrm{CH}_{4,1}}X_{I,1} - AX_{I,2}v_{\mathrm{s}} - (1-\eta) \times (1-\mathrm{SF}_2)F_{\mathrm{IN}}X_{I,2} + \mathrm{TM}_2V_2 \tag{26$'$}$$

$$\frac{\mathrm{dMS}_{j,2}}{\mathrm{d}t} = (1-\mathrm{SF}_1)F_{\mathrm{IN}}S_{j,1} - (1-\mathrm{SF}_2)F_{\mathrm{IN}}S_{j,2} + (\mathrm{SF}_1 - \mathrm{SF}_2)\,F_{\mathrm{IN}}S_{j,\mathrm{IN}} + R_{Sj,2}V_2 - ((1-\lambda)S_{j,1} + \lambda S_{j,2})\frac{\mathrm{d}V_1}{\mathrm{d}t},$$
$$j = \mathrm{G, E, B, AA, H\ and\ CO_2} \tag{37$'$}$$

$$\phi_{\mathrm{CH}_{4,2}} = \frac{R_{\mathrm{SCH}_{4,2}}V_2}{\rho_{\mathrm{CH}_4}} \tag{42}$$

$$\frac{\mathrm{d}V_2}{\mathrm{d}t} = -\frac{1}{X_1}\sum_i \frac{\mathrm{dMX}_{i,1}}{\mathrm{d}t} \tag{43}$$

Settler mass balances:

$$\frac{\mathrm{dMX}_{i,3}}{\mathrm{d}t} = (1-\eta)(1-\mathrm{SF}_2)F_{\mathrm{IN}}X_{i,2} - F_{\mathrm{IN}}X_{i,3},$$
$$i = \mathrm{F, AE, AB, MA, MH\ and}\ I \tag{38$'$}$$

$$\frac{\mathrm{dMS}_{j,3}}{\mathrm{d}t} = (1-\mathrm{SF}_2)F_{\mathrm{IN}}S_{j,2} + \mathrm{SF}_2F_{\mathrm{IN}}S_{j,\mathrm{IN}} - F_{\mathrm{IN}}S_{j,3},$$
$$j = \mathrm{G, E, B, AA, H\ and\ CO_2} \tag{39$'$}$$

Additional constraints:

$$h = h_1 + h_2 + h_3 \tag{44}$$

$$V = V_1 + V_2 + V_3 \tag{45}$$

$$V_m = Ah_m, \quad m = 1, 2\ \mathrm{and}\ 3 \tag{46}$$

$$X_{i,m} = \frac{MX_{i,m}}{V_m}, \quad i = \mathrm{F, AE, AB, MA, MH\ and\ I}$$
$$m = 1, 2\ \mathrm{and}\ 3 \tag{47}$$

$$X_1 = \sum_i X_{i,1} = 85 \tag{48}$$

$$X_2 = \sum_i X_{i,2} \tag{49}$$

$$S_{j,m} = \frac{\mathrm{MS}_{j,m}}{V_m}, \quad j = \mathrm{G, E, B, AA, H\ and\ CO_2}$$
$$m = 1, 2\ \mathrm{and}\ 3 \tag{50}$$

Eq. (28) can be written as a combination of Eqs. (47) and (48). Likewise, Eq. (43) can be written as a combination of Eqs. (28) and (45) (since $dV = dV_3 = 0$). Therefore, those differential equations of the flow model for the UASB reactor can be substituted by algebraic equations. Expression (41) is actually a logical implication that can be expressed by

$$dV_1\lambda = \frac{1}{2}(|dV_1| + dV_1) \tag{51}$$

Therefore, there are 36 differential equations, 72 algebraic equations (including the kinetic equations) and 1 logical implication. Note that among the algebraic equations there are 26 from the kinetic model (13 for the bed and 13 for the blanket) composed of Eqs. (2)–(14). Also, there are 17 parameters and 108 variables, and for the dynamic simulation of the flow model of the UASB reactor the following definitions are needed:

- Values for the following 17 parameters:
  - F_{IN}, $S_{j,IN}$, $X_{i,IN}$, V, V_3, A, η.
- Initial values for the following 36 state variables:
  - $S_{j,m}$ ($m = 1$–3), $X_{i,2}$, $X_{i,3}$;
  - $X_{i,1}$ (five of the six anaerobic sludge component concentrations in the bed);
  - V_m volume of either the bed or the blanket.

3.2. EGSB reactor

The flow model for the EGSB reactor is simpler than the one presented for the UASB reactor. Since the EGSB reactor has no internal sections like its predecessor, the sludge concentration throughout the whole reactor is considered the same.

The following assumptions are made for the sludge discharge in the EGSB reactor:

- the discharge is made at the bottom of the reactor;
- the discharge is constant;
- the amount of discharged sludge is equal to the amount of sludge produced inside the EGSB reactor.

The following are the subscripts for the EGSB model:

n	stream
FD	feed
IN	inlet
OUT	outlet
OUT.r	recycle
TW	treated effluent

and the following variables and parameters:

ϕ_{CH_4}	volumetric production rate of biogas in the EGSB reactor (m^3/h)
μ_i	growth rate for bacterium i (h^{-1})
A	cross-sectional area of the EGSB reactor (m^2)
DC	total discharged sludge flow (kg/m^3 h)
DC_i	discharge flow for bacterium i (kg/m^3 h)
F_n	flow rate for stream n (m^3/h)
h	height of the EGSB reactor (m)
r	recycle rate
R_{Sj}	reaction rate in the EGSB reactor (kg/m^3 h)
S_j	concentration of substrate j in the EGSB reactor (kg/m^3)
$S_{j,n}$	concentration of substrate j in stream n (kg/m^3)
TM	rate of formation of the endogenous residue in the EGSB reactor (kg/m^3 h)
V	volume of the EGSB reactor (m^3)
X	sludge concentration in the EGSB reactor (kg/m^3)
X_i	concentration of bacterium i in the EGSB reactor (kg/m^3)
$X_{i,n}$	concentration of bacterium i in stream n (kg/m^3)

Equations

$$F_{IN} = F_{FD}(1 + r) \tag{52}$$

$$F_{FD} = F_{TW} \tag{53}$$

$$\phi_{CH_4} = R_{SCH_4}V \tag{54}$$

$$S_{j,IN}F_{IN} = S_{j,FD}F_{FD} + S_jF_{FD}r, \quad j = \text{G, E, B, AA, H and } CO_2 \tag{55}$$

$$X_{i,TW} = \frac{DC_iV}{F_{FD}}, \quad i = \text{F, AE, AB, MA, MH and I} \tag{56}$$

$$X_{i,IN}F_{IN} = X_{i,FD}F_{FD}, \quad i = \text{F, AE, AB, MA, MH and I} \tag{57}$$

$$V = Ah \tag{58}$$

Due to the assumptions, the following holds for the sludge discharge:

$$\sum_i \frac{dX_i}{dt} = 0 \tag{59}$$

The discharged sludge flow, DC, is given by

$$DC = \sum_i \frac{F_{IN}}{V}X_{i,IN} + \sum_{i\neq I}(\mu_iX_i - b_iX_i) + TM \tag{60}$$

where $\sum_i F_{IN}/VX_{i,IN}$ is the sludge brought into the EGSB reactor from the inlet stream, $\sum_{i\neq I}(\mu_iX_i - b_iX_i)$ is the net growth of all bacteria in the EGSB reactor, taking into account the anabolic reactions and their perishing.

The discharge of all bacteria and the endogenous residue, DC_i, is considered proportional to their concentration in the reactor. Hence

$$DC_i = \frac{X_i}{X}DC, \quad i = \text{F, AE, AB, MA, MH and I} \tag{61}$$

The mass balance for a bacterium i inside the EGSB reactor is given by

$$\frac{dX_i}{dt} = \frac{F_{IN}}{V}X_{i,IN} - DC_i + \mu_iX_i - b_iX_i, \quad i = F, \text{AE, AB, MA and MH} \tag{62}$$

and for the endogenous residue:

$$\frac{dX_I}{dt} = \frac{F_{IN}}{V} \cdot X_{I,IN} - DC_I + TM \quad (63)$$

Due to the hypothesis that the EGSB reactor behaves like a CSTR [9], the mass balance for the substrates is given by

$$\frac{dS_j}{dt} = \frac{F_{IN}}{V}(S_{j,IN} - S_j) + R_{Sj},$$
$$j = \text{G, E, B, AA, H and } CO_2 \quad (64)$$

Moreover, the concentration of the substrates in the OUT, OUT.r and TW streams are identical to the concentration of those substrates inside the reactor.

Note that combining Eqs. (59)–(63), the following is true:

$$X = \sum_i X_i \quad (65)$$

Hence, at least one of the differential mass balances for the sludge components can be substituted by the algebraic equation (65).

In the proposed flow model for the EGSB reactor, there are 11 differential equations and 43 algebraic equations (including the kinetic equations). Also there are 17 parameters and 54 variables, and for a dynamic simulation of the flow model of the EGSB reactor the following definitions are needed:

- Values for the following 17 parameters:
  - FD, $S_{j,FD}$, X, $X_{i,FD}$, V
  - IN or r
  - A or h
- Initial values for the following 11 state variables:
  - S_j;
  - X_i (five of the six anaerobic sludge concentrations present in the EGSB reactor)

4. Validation of the kinetic and flow models

4.1. Implementation of the models

The implementation and simulations of the operation of anaerobic digesters (UASB and EGSB reactors) were made with MATLAB V5.2.0 to compile the models presented in item 3. Since the simulations start at transient state with a system of ordinary differential equations (ODE), the *ODE15S* solver was used, which solves stiff ODE systems using a variable order method. *ODE15S* is a quasi-constant step size implementation in terms of backward difference from the Klopfenstein–Shampine family of orders 1–5 numerical differentiation formulas. Moreover, it uses natural free interpolators and local extrapolation is not done. By default, the Jacobians are numerically generated.

4.2. Kinetic model simulations

4.2.1. Simulations of the kinetic model based on Kalyuzhnyi [4]

For the dynamic simulations of this kinetic model, the equation regarding the rate of formation of the endogenous residue was suppressed, since the emphasis is to analyze the kinetic behavior of the system. The general structure of the dynamic equations is:

$$\frac{dS_j}{dt} = R_{Sj}, \quad j = \text{G, E, B, AA, E, } CO_2 \text{ and } CH_4$$

$$\frac{dX_i}{dt} = \mu_i - b_i, \quad i = F, \text{AE, AB, MA and H}$$

Therefore, the dynamic simulation of the kinetic model requires a set of initial concentrations for all the substrates and bacteria involved.

A series of simulations of the kinetic model was performed that compares the results to the simulations presented by Kalyuzhnyi [4] and to the experimental results obtained in Kalyuzhnyi and Davlyatshina [11]. The values for the kinetic parameters are the same used by Kalyuzhnyi [4] and described in Table 2. Again, the simulations made by the current work do not take into account pH inhibition, which has been suppressed for this specific kinetic model.

Table 2
Kinetic parameters and initial bacterial population concentrations for Cases K1 and K2

Parameter	Value	Unit
μ_{mF}	0.175	h^{-1}
μ_{mAE}	0.280	h^{-1}
μ_{mAB}	0.011	h^{-1}
μ_{mMA}	0.015	h^{-1}
μ_{mMH}	0.058	h^{-1}
K_G	0.128	mol/m^3
K_E	0.060	mol/m^3
K_B	1.100	mol/m^3
K_{AA}	2.300	mol/m^3
K_H	0.008	mol/m^3
K_{CO_2}	0.010	mol/m^3
Y_F	0.0220	kg/mol
Y_{AE}	0.0020	kg/mol
Y_{AB}	0.0045	kg/mol
Y_{MA}	0.0025	kg/mol
Y_{MH}	0.0004	kg/mol
b_F	0.00125	h^{-1}
b_{AE}	0.00125	h^{-1}
b_{AB}	0.00125	h^{-1}
b_{MA}	0.00083	h^{-1}
b_{MH}	0.00125	h^{-1}
K_{IFH}	0.03205	mol/m^3
K_{IAEH}	0.32051	mol/m^3
K_{IABH}	0.00641	mol/m^3
K_{IABAA}	10	mol/m^3
K_{IMAB}	21	mol/m^3
K_{IMAE}	35	mol/m^3
K_{IMHB}	16	mol/m^3
K_{IMHE}	29	mol/m^3
Bacterial population	**Initial concentration**	**Unit**
X_F	0.058	kg/m^3
X_{AE}	0.011	kg/m^3
X_{AB}	0.017	kg/m^3
X_{MA}	0.025	kg/m^3
X_{MH}	0.039	kg/m^3

Table 3
Initial conditions and results for substrates for Case K1 (concentration values in mol/m^3)

Time (h)	Ref. [11]							Ref. [4]				Current work						
	S_G	S_E	S_B	S_{AA}	S_H	S_{CO_2}	S_{CH_4}	S_G	S_B	S_{AA}	S_{CH_4}	S_G	S_E	S_B	S_{AA}	S_H	S_{CO_2}	S_{CH_4}
0	5.6	0.0	10.0	0.2	0.00	0.3	0.0	5.6	10.0	0.2	0.0	5.6	0.0	10.0	0.2	0.00	0.3	0.0
15	0.0	0.1	11.6	4.4	0.14	1.7	0.8	0.0	11.6	7.8	2.3	0.0	0.0	11.5	8.1	0.00	4.4	2.6
23	0.0	0.0	12.1	6.0	0.06	3.0	1.9	0.0	11.5	8.4	3.0	0.0	0.0	11.1	8.0	0.00	4.9	3.4
46	0.0	0.0	11.4	6.8	0.00	4.6	4.8	0.0	10.6	8.4	4.8	0.0	0.0	10.1	7.7	0.00	6.5	5.9
67	0.0	0.0	10.3	6.1	0.00	7.3	7.5	0.0	9.7	8.3	6.5	0.0	0.0	9.1	7.4	0.00	8.1	8.6
111	0.0	0.0	7.4	6.0	0.00	9.3	12.6	0.0	7.4	7.8	11.5	0.0	0.0	6.3	6.0	0.00	12.9	16.0
136	0.0	0.0	5.8	5.1	0.00	11.9	15.9	0.0	5.8	6.9	15.9	0.0	0.0	4.4	4.6	0.00	16.6	21.4
165	0.0	0.0	3.6	4.6	0.00	15.9	22.2	0.0	3.6	5.6	22.2	0.0	0.0	2.1	2.4	0.00	21.6	28.6
185	0.0	0.0	1.8	3.3	0.00	19.1	27.8	0.0	1.8	3.3	27.8	0.0	0.0	0.7	1.1	0.00	24.6	32.9
208	0.0	0.0	0.4	2.3	0.00	21.7	32.5	0.0	0.4	0.8	33.5	0.0	0.0	0.1	0.2	0.00	26.3	35.2

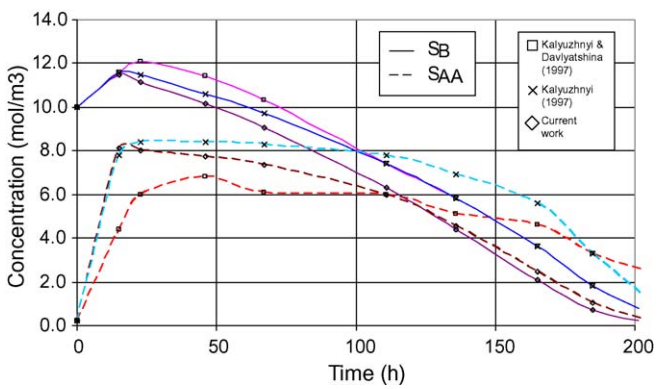

Fig. 3. Comparison of the results for concentration of butyric and acetic acid by the simulation of Case K1 against the experimental data of Kalyuzhnyi and Davlyatshina [11] and the simulation of Kalyuzhnyi [4].

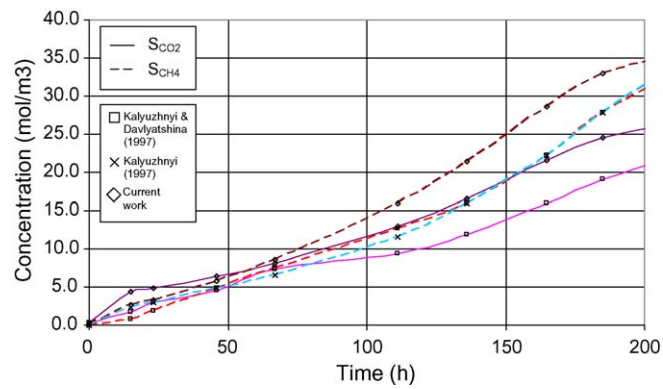

Fig. 4. Comparison of the results for concentration of carbon dioxide and methane by the simulation of Case K1 against the experimental data of Kalyuzhnyi and Davlyatshina [11] and the simulation of Kalyuzhnyi [4].

The initial conditions for the substrate concentrations are the same presented in Kalyuzhnyi and Davlyatshina [11] and given in Tables 3 (Case K1) and 4 (Case K2) along with the results. Those differ in terms of the nonzero initial concentrations of ethanol, glucose and ethanol, respectively. For the bacterial populations, the initial concentrations are, according to Kalyuzhnyi [4], given in Table 2.

Figs. 3–8 show the simulation of the current work as well as the data in Kalyuzhnyi [4] and Kalyuzhnyi and Davlyatshina [11].

The results for the simulation of Cases K1 and K2 were satisfactory when compared to the ones performed in Kalyuzhnyi [4] and the experimental data in Kalyuzhnyi and Davlyatshina [11]. The most significant difference was the rapid consumption of acetic acid and formation of carbon dioxide and methane. This

Table 4
Initial conditions and results for substrates for Case K2 (concentration values in mol/m^3)

Time (h)	Ref. [11]						Ref. [4]				Current work					
	S_E	S_B	S_{AA}	S_H	S_{CO_2}	S_{CH_4}	S_E	S_B	S_{AA}	S_{CH_4}	S_E	S_B	S_{AA}	S_H	S_{CO_2}	S_{CH_4}
0	21.0	10.0	0.2	0.0	0.2	0.0	21.0	10.0	0.2	0.0	21.0	10.0	0.2	0.0	0.2	0.0
14	19.5	10.1	1.9	1.5	0.4	0.5	17.6	10.1	2.6	0.4	17.4	10.0	3.2	4.8	0.0	0.8
45	16.0	10.2	4.8	1.7	0.3	3.5	13.8	10.2	5.2	2.8	13.0	10.0	5.8	8.1	0.0	3.4
65	12.9	9.8	5.5	1.6	0.2	5.6	11.5	9.8	6.3	4.6	10.2	10.0	7.1	9.1	0.0	5.6
110	6.7	9.6	7.2	1.4	0.2	10.3	6.0	9.6	8.3	10.3	2.6	10.0	9.9	9.3	0.0	12.7
134	3.8	9.6	8.7	1.3	1.1	13.7	3.1	10.0	9.2	12.2	0.0	10.0	8.9	3.0	0.0	18.4
163	0.0	9.8	10.1	0.7	1.3	17.9	0.0	9.8	10.1	16.5	0.0	9.3	5.3	0.0	3.4	24.0
183	0.0	9.2	8.7	0.2	1.5	20.3	0.0	9.8	7.6	19.6	0.0	8.5	3.3	0.0	6.3	27.7
206	0.0	8.8	7.6	0.0	2.2	23.6	0.0	9.3	5.7	23.2	0.0	7.5	1.6	0.0	9.2	31.5
229	0.0	7.6	5.8	0.0	5.4	29.6	0.0	8.6	3.5	27.1	0.0	6.2	1.0	0.0	11.3	34.8
282	0.0	5.8	2.9	0.0	10.7	35.1	0.0	5.8	1.3	35.1	0.0	2.8	0.9	0.0	15.8	42.5
309	0.0	4.2	1.6	0.0	12.4	39.2	0.0	4.2	1.3	38.3	0.0	1.0	0.6	0.0	18.2	46.6
339	0.0	2.1	1.2	0.0	14.5	41.9	0.0	2.1	1.3	41.9	0.0	0.1	0.1	0.0	19.9	49.1

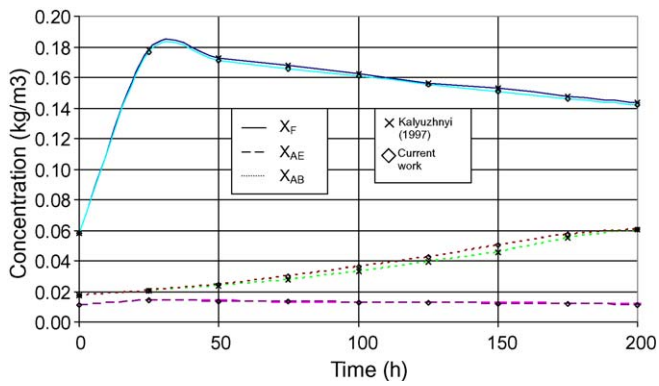

Fig. 5. Comparison of the results for concentration of the bacteria type F, AE and AB by the simulation of Case K1 against the simulation of Kalyuzhnyi [4].

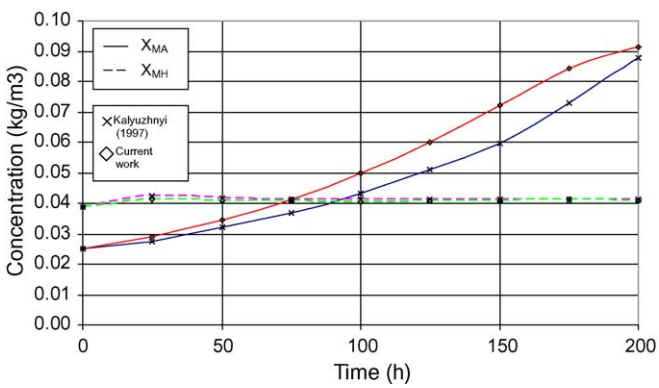

Fig. 6. Comparison of the results for concentration of the bacteria type MA, MH and AB by the simulation of Case K1 against the simulation of Kalyuzhnyi [4].

could be explained due to the suppression of the pH inhibition factor in the kinetic model developed by the current work. That also reflected on the rapid growth of the acetoclastic methanogen bacterium, which is the one that is most influenced by pH. In Case K2, there is a peak in the hydrogen concentration that was unobserved in the experimental data from Kalyuzhnyi and Davlyatshina [11]. This could be explained by the existence of a reversible reaction that has not been predicted in the stoichiometric model. Since Kalyuzhnyi [4] does not approach simulation

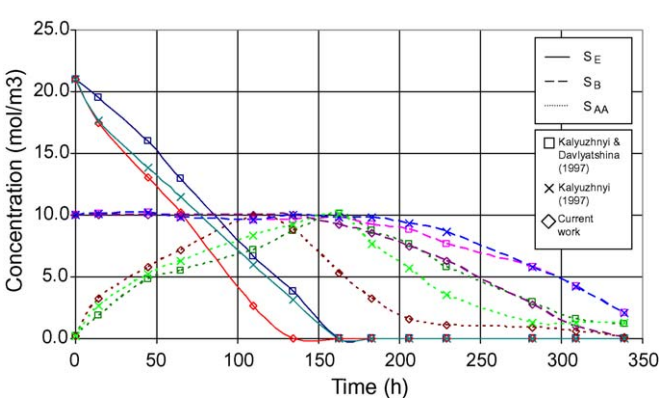

Fig. 7. Comparison of the results for concentration of butyric and acetic and ethanol acid by the simulation of Case K2 against the experimental data of Kalyuzhnyi and Davlyatshina [11] and the simulation of Kalyuzhnyi [4].

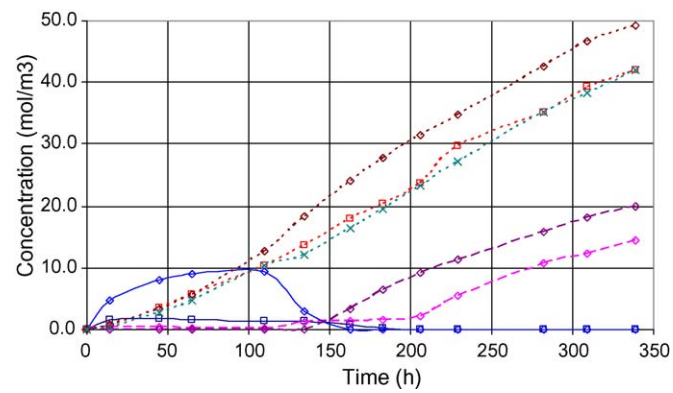

Fig. 8. Comparison of the results for concentration of carbon dioxide, hydrogen and methane by the simulation of Case K2 against the experimental data of Kalyuzhnyi and Davlyatshina [11] and the simulation of Kalyuzhnyi [4].

Table 5
Kinetic parameters and initial bacterial population/substrate concentrations for Case K3

Parameter	Value	Unit
μ_{mMA}	16×10^{-4}	h^{-1}
K_{AA}	0.002	kg/m^3
Y_{MA}	0.04	kg/kg
b_{MA}	1.5×10^{-4}	h^{-1}
$K_{IMA,AA}$	0.0158	kg/m^3
Substrate/bacterium	**Initial concentration**	**Unit**
S_{AA}	5.5	kg/m^3
X_{MA}	6.4	kg/m^3

results for cases with high initial concentrations of ethanol, like Case K2, which will eventually produce a relatively high concentration of hydrogen, it is difficult to determine the reason for the difference between the results from the current work and those of Kalyuzhnyi and Davlyatshina [11].

4.2.2. Simulations on the kinetic model based on Bolle et al. [1]

The values for the kinetic parameters used in the simulation were given by Bolle et al. [1]. The initial conditions for the bacterial population and substrate concentration, denoted as Case K3, were the same as the experiments made by Bolle et al. [1]. The initial acetic acid concentration was 5.5 kg/m^3 and the initial microorganism concentration was 6.4 kg/m^3 (Tables 4 and 5).

The results are given in Fig. 9 and in Table 6.

Table 6
Case K3 results

Time (h)	S_{AA} [1]	S_{AA} (current work)
0	5.5	5.5
10	4.2	4.3
20	2.7	2.9
30	1.5	1.4
40	0.2	0.2
50	0.0	0.0

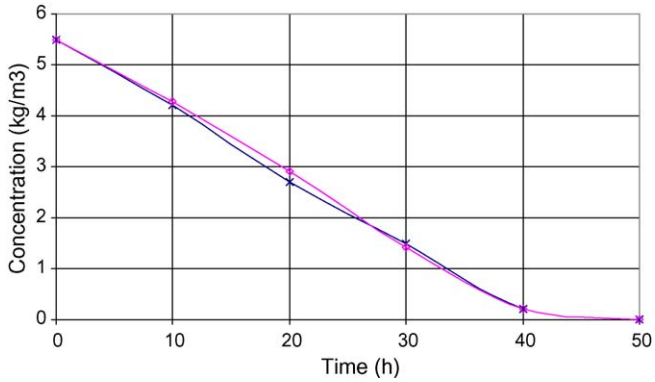

Fig. 9. Comparison of the results for concentration of acetic acid by the simulation of Case K3 against the experimental data of Bolle et al. [1].

For Case K3, the simulation results were quite similar to the ones presented in Bolle et al. [1]. It is important to notice that the values of the kinetic parameters used by Bolle et al. [1] represent an average of many experiments.

4.3. Flow model simulations

4.3.1. UASB reactor

First, we present and compare our simulations with those obtained from Bolle et al. [6]. Next, the main model parameters are varied to perform a sensitivity analysis.

4.3.1.1. Comparison with the results from Bolle et al. [6]. Firstly, the kinetic model based on Bolle et al. [1] was integrated with the flow model of the UASB reactor in order to compare the simulations of that model with the experimental data presented by Bolle et al. [6]. The substrates involved in the kinetic model based on Bolle et al. [1] are also present in the kinetic model based on Kalyuzhnyi [4].

The first simulation compares the flow model described in the current work – which includes the referred term and denoted as Case H1 – with the flow model described in Bolle et al. [6] – which does not include the term represented in (36) and (36′) and denoted as Case H2. This simulation is done in a "batch operation mode" where there are no inlet and outlet streams that corresponds to a hypothetical situation, since the UASB reactor is not operated under this condition. Thus, the mass balances for the substrates are only composed by the reaction term and the term that accounts for the amount of substrate lost/gained due to the variation of the volumes of the bed/blanket.

The flow model parameters and initial conditions for the two cases are given in Table 7. The values for the flow parameters v_s, η_{dr} and η were extracted from Bolle et al. [6], whereas the value for v_{sg} was extracted from Bolle et al. [10] (Table 8).

Figs. 10 and 11 present the comparison of the results of the simulations of Cases H1 and H2.

Fig. 11 shows an anomaly in the simulation of Case H2. In the kinetic model based on Bolle et al. [1], acetic acid is only consumed; hence the concentration of acetic acid inside the reactor can only decrease. The peak in the acetic acid concentration in the bed, a value above the one at the start of the simulation, shows that an unattainable situation occurred. That same peak, however, is not present in the simulation of Case H1, where the terms that account for the changes in the bed/blanket volumes are present. The curves of Case H1 have the expected behavior for the simulation.

The next step was to perform a simulation in continuous operation that corresponds to how the UASB reactor actually operates, and to compare the results to the ones shown in Bolle et al. [6]. Two cases were set, the first (Case H3) where the flow model included Eqs. (21), (21′), (22) and (22′) for the calculation

Table 7
Parameters and initial conditions for Cases H1 and H2

Parameter/initial condition	Value	Unit
$S_{AA,1}$	3	kg/m^3
$S_{AA,2}$	3	kg/m^3
$S_{AA,3}$	3	kg/m^3
$S_{CO_2,1}$	0	kg/m^3
$S_{CO_2,2}$	0	kg/m^3
$S_{CO_2,3}$	0	kg/m^3
X_1	90	kg/m^3
X_2	25	kg/m^3
X_3	0	kg/m^3
$X_{MA,1}$	90	kg/m^3
$X_{MA,2}$	25	kg/m^3
$X_{MA,3}$	0	kg/m^3
$X_{I,1}$	0	kg/m^3
$X_{I,2}$	0	kg/m^3
$X_{I,3}$	0	kg/m^3
V_1	910	m^3
V_2	390	m^3
V_3	300	m^3
A	300	m^2
$S_{AA,IN}$	3	kg/m^3
$S_{CO_2,IN}$	0	kg/m^3
X_{IN}	0	kg/m^3
$X_{MA,IN}$	0	kg/m^3
$X_{i,IN}$	0	kg/m^3
v_{sg}	1.25	m/h
v_s	3.5	m/h
η_{dr}	0.3	
η	0.995	
$X_{I,3}$	0	kg/m^3
V_1	910	m^3

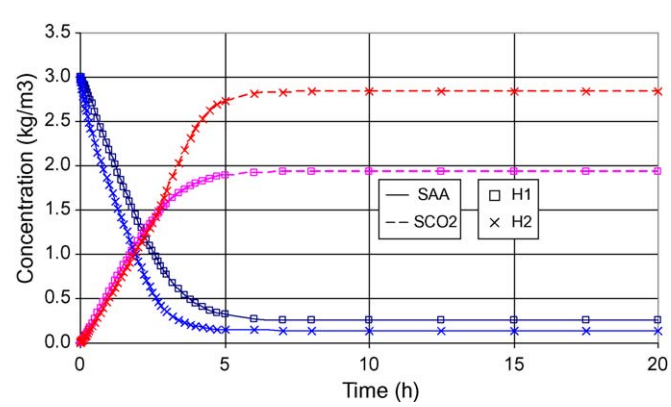

Fig. 10. Comparison of the results of for concentration of acetic acid and hydrogen by the simulation of Cases H1 and H2 in the blanket of a UASB reactor.

Table 8
Parameters and initial conditions for Cases H3 and H4

Parameter/initial condition	Value	Unit
$S_{AA,1}$	0.033	kg/m^3
$S_{AA,2}$	0	kg/m^3
$S_{AA,3}$	0.4	kg/m^3
$S_{CO_2,1}$	0	kg/m^3
$S_{CO_2,2}$	0	kg/m^3
$S_{CO_2,3}$	0	kg/m^3
X_1	90	kg/m^3
X_2	23.5	kg/m^3
X_3	0	kg/m^3
$X_{MA,1}$	90	kg/m^3
$X_{MA,2}$	23.5	kg/m^3
$X_{MA,3}$	0	kg/m^3
X_{I1}	0	kg/m^3
X_{I2}	0	kg/m^3
X_{I3}	0	kg/m^3
V_1	910	m^3
V_2	390	m^3
V_3	300	m^3
A	300	m^2
$S_{AA,IN}$	3	kg/m^3
$S_{CO_2,IN}$	0	kg/m^3
X_{IN}	0	kg/m^3
$X_{MA,IN}$	0	kg/m^3
$X_{I,IN}$	0	kg/m^3
IN	200	m^3/h
v_{sg}	1.25	m/h
v_s	3.5	m/h
η_{dr}	0.3	
η	0.995	

of SF_1 and SF_2, and the second (Case H4) where those values were extracted from Fig. 3 of Bolle et al. [6].

The flow model parameters and initial conditions for the two cases are given in Table 7. The simulation results are given in Table 9.

Table 9 shows considerable differences between the experimental results from Bolle et al. [6] and those obtained from the simulations of the current work. For Case H4, which uses the values for short-circuit fractions from Fig. 3 of Bolle et al. [6], those differences are even greater. The flow model parameters used in the UASB reactor flow model could be the reason for such differences.

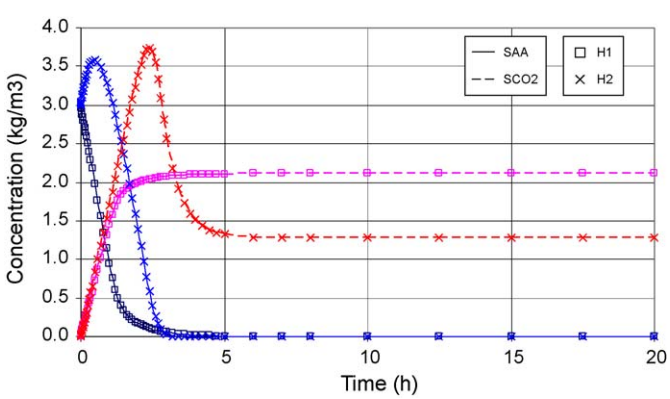

Fig. 11. Comparison of the results of for concentration of acetic acid and hydrogen by the simulation of Cases H1 and H2 in the bed of a UASB reactor.

Table 9
Experimental data from Bolle et al. [6] and results from Cases H3 and H4

Variable	Bolle et al. [6]	Case H3	Case H4
h_1 (m)	3.00	0.85	0.35
X_2 (kg/m^3)	23.5	14.7	17.5
$S_{AA,1}$ (kg/m^3)	0.033	0.165	1.849
$S_{AA,2}$ (kg/m^3)	–	0.073	0.324
$S_{AA,3}$ (kg/m^3)	0.400	0.556	0.712
SF_1	0.145	0.712	0.145
SF_2	0.145	0.152	0.145
ϕ_{CH_4} (m^3/h)	200	106	117

Bolle et al. [10] do not describe how the parameter v_{sg} (superficial velocity of the biogas) is calculated, and this value has direct effect on the calculation of the short-circuit fractions. Bolle et al. [6] do not mention any value for this parameter in the calculation of the short-circuit fractions.

Moreover, Bolle et al. [10] do not make clear whether Eqs. (21), (21′), (22) and (22′) can be extrapolated to UASB reactors with different dimensions from those used in the experiment to evaluate those equations. Furthermore, if the dimensions differ, it is not mentioned if a correction factor is needed for Eqs. (21), (21′), (22) and (22′).

Bolle et al. [6] use the values from Lettinga et al. [12] for the calculation of v_s (sludge settling velocity), who only present experimental data for the calculation of that parameter rather than an equation. There are settling velocities equations, but were inaccurate for that task, once they are obtained for different types of sludge. Narnoli and Mehrotra [8] used $v_s = 2$ m/h as a constant, that is considerably different from the values used in Bolle et al. [6]. Nevertheless, the use of that value in the simulation would only increase the mentioned differences, since less sludge would settle to the bed, thus further decreasing the bed height value. This is verified in the sensitivity analysis in this section.

Finally, parameter x' (sludge drag coefficient by the biogas) is defined by Bolle et al. [6] and shown in Eq. (20), but these authors do not describe how to calculate the dragging efficiency, η_{dr}, which is present in the mass balances for the bacteria in the blanket. Bolle et al. [6] simply mention values ranging from 0.13 to 0.30, which vary according to other parameters.

The involved theory in the development of the flow model described by Bolle et al. [6] is consistent; nevertheless the model fails to determine how the involved flow model parameters can be calculated.

4.3.1.2. Sensitivity analysis of the proposed flow model. Since many values of the parameters in the flow model are estimates, a sensitivity analysis for these parameters is necessary. The purpose of such analysis is to evaluate the impact of the parameters on the main state variables of the UASB reactor. The analysis was made for four parameters: $Y_{X/I}$, η_{dr}, v_s and SF_1. Case H4 was used for the analysis.

Bolle et al. [6] take into account in their model the decay rate for the bacteria, but they do not take into account the formation of the endogenous residue, which on the other hand is taken into account in our proposed model. Parameter $Y_{X/I}$ was

Table 10
Parameter $Y_{X/I}$ sensitivity analysis results

Variable	Case H3 ($Y_{X/I}$ = 0.2)	$Y_{X/I}$ = 0.15 (−25%)		$Y_{X/I}$ = 0.10 (−50%)		$Y_{X/I}$ = 0.05 (−75%)		$Y_{X/I}$ = 0.00 (−100%)	
h_1 (m)	0.35	0.34	−2.9%	0.33	−5.7%	0.32	−8.4%	0.31	−11.1%
X_2 (kg/m^3)	17.5	17.2	−1.5%	16.9	−3.0%	16.7	−4.5%	16.4	−6.0%
$X_{AA,2}$ (kg/m^3)	16.5	16.5	−0.1%	16.4	−0.2%	16.4	−0.2%	16.4	−0.3%
$S_{AA,1}$ (kg/m^3)	1.849	1.866	0.9%	1.883	1.8%	1.900	2.7%	1.916	3.6%
$S_{AA,2}$ (kg/m^3)	0.324	0.328	1.1%	0.332	2.3%	0.335	3.4%	0.339	4.6%
$S_{AA,3}$ (kg/m^3)	0.712	0.716	0.4%	0.719	0.9%	0.722	1.3%	0.725	1.8%
ϕ_{CH_4} (m^3/h)	117	117	0.0%	117	0.0%	117	0.0%	116	−0.9%

Table 11
Parameter η_{dr} sensitivity analysis results

Variable	Case H3 (η_{dr} = 0.30)	η_{dr} = 0.26 (−13.3%)		η_{dr} = 0.22 (−26.7%)		η_{dr} = 0.18 (−40.0%)		η_{dr} = 0.13 (−56.7%)	
h_1 (m)	0.35	0.41	16.7%	0.49	40.8%	0.64	82.0%	1.21	246%
X_2 (kg/m^3)	17.5	17.6	1.0%	17.8	2.0%	18.0	2.9%	17.4	−0.5%
$S_{AA,1}$ (kg/m^3)	1.849	16.6	0.8%	16.7	1.5%	16.8	1.8%	15.9	−3.7%
$S_{AA,2}$ (kg/m^3)	0.324	1.661	−10.2%	1.406	−24.0%	1.045	−43.5%	0.429	−76.8%
$S_{AA,3}$ (kg/m^3)	0.712	0.281	−13.3%	0.228	−29.7%	0.163	−49.8%	0.073	−77.6%
ϕ_{CH_4} (m^3/h)	117	0.675	−5.2%	0.630	−11.6%	0.574	−19.4%	0.497	−30.2%

Table 12
Parameter v_s sensitivity analysis results

Variable	Case H3 (v_s = 3.50 m/h)	v_s = 3.20 (−8.6%)		v_s = 2.80 (−20.0%)		v_s = 2.40 (−31.4%)		v_s = 2.00 (−42.9%)	
h_1 (m)	0.35	0.32	−9.0%	0.28	−20.9%	0.24	−32.6%	0.20	−44.2%
X_2 (kg/m^3)	17.5	17.3	−0.6%	17.2	−1.6%	17.0	−2.6%	16.8	−3.8%
$S_{AA,1}$ (kg/m^3)	1.849	16.4	−0.5%	16.3	−1.3%	16.1	−2.2%	15.9	−3.2%
$S_{AA,2}$ (kg/m^3)	0.324	1.953	5.6%	2.091	13.1%	2.229	20.5%	2.364	27.9%
$S_{AA,3}$ (kg/m^3)	0.712	0.350	8.0%	0.387	19.4%	0.427	31.6%	0.470	44.9%
ϕ_{CH_4} (m^3/h)	117	0.735	3.1%	0.766	7.5%	0.800	12.3%	0.837	17.5%

decreased from 0.2 (the base value in this work) to 0 (no endogenous residue is formed). Table 10 shows how the variation of parameter $Y_{X/I}$ affects the main state variables.

The dragging efficiency, η_{dr}, and the settling velocity, v_s, have a direct effect on the bed and blanket volumes. An analysis was made for η_{dr} ranging from 0.13 to 0.30, and for v_s varying from 3.5, value used by Bolle et al. [6], to 4.0, value used by Narnoli and Mehrotra [8]. The results for this analysis are shown in Tables 11 and 12.

Finally, the short-circuit fraction of the stream that by-passes the bed, SF_1, was also treated as a parameter, and a sensitivity analysis was made from 0.145 (value used in Case H4) to 0.712 (value used in Case H3). The results are given in Table 13.

The effects of the variation of the values of $Y_{X/I}$ on the state variables are small inside the range of the analysis. There was a 6% drop in the value of X_2 and an increase of 2% in the value of $S_{AA,3}$ when the parameter $Y_{X/I}$ was decreased from 0.2 to 0.0.

The change on parameter η_{dr} has a quite significant impact on some of the UASB reactor state variables. When decreasing the value of η_{dr} from 0.30 to 0.13, the value for h_1 more than tripled and the value of $S_{AA,3}$ decreased by about 30%. The sludge settling velocity also had an influence on the values of these variables, but not too significant as the ones found for η_{dr}. When decreasing the value of v_s from 3.5 to 2.0, the value for h_1 decreased in 45% and the value of $S_{AA,3}$ increased in about 30%.

Finally, for SF_1 there were some noticeable changes when its value was increased from 0.145 to 0.712, in particular for the h_1 values, which more than doubled, for $S_{AA,3}$,

Table 13
Parameter SF_1 sensitivity analysis results

Variable	Case H3 (SF_1 = 0.145)	SF_1 = 0.42 (190%)		SF_1 = 0.56 (286%)		SF_1 = 0.64 (341%)		SF_1 = 0.712 (391%)	
h_1 (m)	0.35	0.36	1.9%	0.40	13.2%	0.52	49.1%	0.84	141%
X_2 (kg/m^3)	17.5	17.4	−0.2%	17.3	−1.1%	16.7	−4.4%	14.7	−15.7%
$S_{AA,1}$ (kg/m^3)	1.849	16.4	−0.2%	16.3	−1.3%	15.6	−5.1%	13.5	−17.9%
$S_{AA,2}$ (kg/m^3)	0.324	1.306	−29.4%	0.792	−57.2%	0.401	−78.3%	0.166	−91.0%
$S_{AA,3}$ (kg/m^3)	0.712	0.326	0.6%	0.338	4.2%	0.381	17.4%	0.565	74.1%
ϕ_{CH_4} (m^3/h)	117	0.714	0.2%	0.724	1.6%	0.761	6.8%	0.918	28.8%

which increased by 29%, and for X_2, which decreased by 16%. The value for SF_2 was set to 0.145 in all of these cases.

Within the ranges of the sensitivity analysis, the most significant changes occurred for the dragging efficiency, η_{dr}. This is in fact the parameter least accurately described by the UASB flow model. An imprecise value for this parameter may result in a completely inaccurate calculation of variables such as bed and blanket volumes, besides giving a false assessment on the overall efficiency of the UASB reactor. The sludge settling velocity, v_s, is also important, and as predicted in the previous section, the lower the value for v_s, the lower the value for the bed volume will be. Although SF_1 can be treated as a variable, it was considered as a parameter for this analysis due to the aforementioned problems on the equations. The effects of the variation of SF_1 are more noticeable when that parameter reaches 0.50. Between 0.145 and 0.42, the differences are negligible, except for the value of $S_{AA,1}$, as expected.

4.3.2. EGSB reactor

Two cases were simulated for the EGSB reactor. The first case, H5, was compared to the experiment performed by Brito and Melo [9], whereas the second case, H6, was compared to the experiment performed by Kato et al. [13]. The initial conditions and constant parameters used in Cases H5 and H6 are given in Table 14.

The results are given in Table 15. The flow model for the EGSB reactor showed similar results to the experimental data related by Brito and Melo [9] and Kato et al. [13]. However, that model is restricted to situations in which there is no sludge washout inside the reactor, and in that situation, additional equations that describe the sludge flow behavior would be needed. That was the reason for the differences from the COD (Chemical Oxygen Demand) removal rate found in the current work simulation in Case H5 (98%) with respect to the one found by Brito and Melo [9], which was 95%. The experiment conducted by Brito and Melo [9] used an upward velocity of the fluid of 20 m/h, whereas Kato et al. [13] recommend that this velocity be lower than 5.5 m/h. The COD removal rate for Case H6 was the same found by Kato et al. [13].

Table 14
Parameters and initial conditions for Cases H5 and H6

Parameter	H5	H6	Unit
$S_{E,FD}$	0	0.287	kg/m^3
$S_{AA,FD}$	1.2	0	kg/m^3
$S_{j,FD}$ ($j \neq$ E, AA)	0	0	kg/m^3
F_{FD}	2.85×10^{-4}	5.57×10^{-3}	m^3/h
r	95	0.58	
F_{IN}	2.74×10^{-2}	8.82×10^{-3}	m^3/h
X	19.0	10.0	kg/m^3
V	4.84×10^{-4}	1.96×10^{-3}	m^3
A	1.37×10^{-3}	1.96×10^{-3}	m^2
h	0.353	1.000	m
DQO_{FD}	1.230	0.600	kg/m^3
Initial condition	**H5**	**H6**	**Unit**
S_E	0	0.287	kg/m^3
S_{AA}	1.2	0	kg/m^3
S_j ($j \neq$ E, AA)	0	0	kg/m^3
$S_{E,IN}$	0	0.287	kg/m^3
$S_{AA,IN}$	0.0	0	kg/m^3
$S_{j,IN}$ ($j \neq$ E. AA)	0	0	kg/m^3
X_i ($I \neq I$)	3.8	2.0	kg/m^3
X_I	0	0	kg/m^3
$X_{i,IN}$	0	0	kg/m^3

5. Conclusions

The present paper addresses the modeling and simulation of anaerobic digestion of wastewater in modern anaerobic digesters, specifically UASB and EGSB reactors. This objective is achieved by establishing a framework of models, which is composed by the stoichiometric, kinetic, and flow (hydraulic) models.

The stoichiometric and kinetic models, which are intrinsically connected, account for the consumption and production of all components involved in the anaerobic digestion, as well as the bacterial population responsible for metabolizing these compounds and the endogenous residue. The flow models are quite different for the UASB and EGSB reactors, but both account for the wastewater flow and the sludge flow which are distinct for modern anaerobic digesters. The flow models for the UASB and EGSB reactors were integrated with the kinetic model described.

Table 15
Cases H5 and H6 results

Variable	Case H5			Case H6		
	Stream IN	Reactor	Stream OUT	Stream IN	Reactor	Stream OUT
S_E (kg/m^3)	0.0000	0.0000	0.0000	0.1817	0.0001	0.0001
S_{AA} (kg/m^3)	0.0310	0.0187	0.0187	0.0503	0.1371	0.1371
S_H (kg/m^3)	0.0000	0.0000	0.0000	0.0001	0.0004	0.0004
S_{CO_2} (kg/m^3)	0.8215	0.8302	0.8302	0.0000	0.0001	0.0001
X_{AE} (kg/m^3)	0.0000	0.0000	0.0000	0.0000	4.4904	5.85×10^{-5}
X_{MA} (kg/m^3)	0.0000	16.1966	7.51×10^{-6}	0.0000	3.4977	4.56×10^{-5}
X_{MH} (kg/m^3)	0.0000	0.0000	0.0000	0.0000	1.6918	2.20×10^{-5}
X_I (kg/m^3)	0.0000	2.7785	1.29×10^{-6}	0.0000	0.3201	4.17×10^{-6}
COD_{OUT} (kg/m^3)	–	0.0199	–	–	0.1494	–
COD removal efficiency (%)	–	98	–	–	75	–
ϕ_{CH_4} (kg/h)	–	8.60×10^{-5}	–	–	6.68×10^{-4}	–

The flow model for the UASB reactor was based on the one presented by Bolle et al. [6], with the very important modification that takes into account the change in the bed and blanket volumes in non-steady state.

Many of the parameters used in the UASB reactor flow model are quite critical for an accurate simulation, but they lack equations and guidelines to their calculations. The dragging efficiency, η_{dr}, of the sludge is the most important parameter to be measured and/or estimated. The simulated results presented many considerable differences to the experimental values presented by Bolle et al. [6]. The EGSB reactor flow model was based on the experiments related by Brito and Melo [9]. Although the model lacks a more definite method on how to treat the sludge behavior and discharge, the simulated results were quite close to the ones obtained by the experimental results shown in Kato et al. [13] and Brito and Melo [9].

Overall, the proposed model can predict the performance of anaerobic digesters. Moreover, the framework allows the integration of different kinetic and flow representations.

Acknowledgements

The authors acknowledge the financial support from CNPq (Brazil). JMP also acknowledges support from H. Wechsler.

References

[1] W.L. Bolle, J. van Breugel, G.C. van Eybergen, N.W.F. Kossen, W. van Gils, Kinetics of anaerobic purification of industrial wastewater, Biotechnol. Bioeng. 28 (1986) 542–548.

[2] D.J. Costello, P.F. Greenfield, P.L. Lee, Dynamic modeling of a single-stage high-rate anaerobic reactor. I. Model derivation, Water Res. 25 (7) (1991) 847–858.

[3] P. Sam-Soon, M.C. Wentzel, P.L. Dold, R.E. Loewenthal, Gv.R. Marais, Mathematical modeling of anaerobic sludge bed (UASB) systems treating carbohydrate waste waters, Water SA 17 (2) (1991) 91–106.

[4] S.V. Kalyuzhnyi, Batch anaerobic digestion of glucose and its mathematical modeling. II. Description, verification and application of model, Bioresour. Technol. 59 (1997) 249–258.

[5] D.J. Batstone, J. Keller, R.B. Newell, M. Newland, Modeling anaerobic degradation of complex wastewater. I. Model development, Bioresour. Technol. 75 (2000) 67–74.

[6] W.L. Bolle, J. van Breugel, G.C. van Eybergen, N.W.F. Kossen, W. van Gils, An integral dynamic model for the UASB reactor, Biotechnol. Bioeng. 28 (1986) 542–548.

[7] A. Van Haandel, G.V.R. Marais, O Comportamento do Sistema de Lodo Ativado—Teoria e Aplicações para Projetos e Operação, Epgraf, Campina Grande, PB, Brazil, 1999.

[8] S.K. Narnoli, I. Mehrotra, Sludge blanket of UASB reactor: mathematical simulation, Water Res. 31 (4) (1997) 715–726.

[9] A.G. Brito, L.F. Melo, A simplified analysis of reaction and mass transfer in UASB and EGSB reactors, Environ. Technol. 18 (1997) 35–44.

[10] W.L. Bolle, J. van Breugel, G.C. van Eybergen, N.W.F. Kossen, R.J. Zoetemeyer, Modeling the liquid flow in up-flow anaerobic sludge blanket reactors, Biotechnol. Bioeng. 28 (1986) 1615–1620.

[11] S.V. Kalyuzhnyi, M.A. Davlyatshina, Batch anaerobic digestion of glucose and its mathematical modeling. I. Kinetic investigations, Bioresour. Technol. 59 (1997) 73–80.

[12] G. Lettinga, A.F.M. van Velsen, S.W. Hobma, W. de Zeeuw, A. Klapwijk, Use of the upflow sludge blanket (USB) reactor concept for biological wastewater treatment, especially for anaerobic treatment, Biotechnol. Bioeng. 22 (1980) 699–734.

[13] M.T. Kato, J.A. Field, P. Versteeg, G. Lettinga, Feasibility of expanded granular sludge bed reactors for the anaerobic treatment of low-strength soluble wastewaters, Biotechnol. Bioeng. 44 (1994) 469–479.